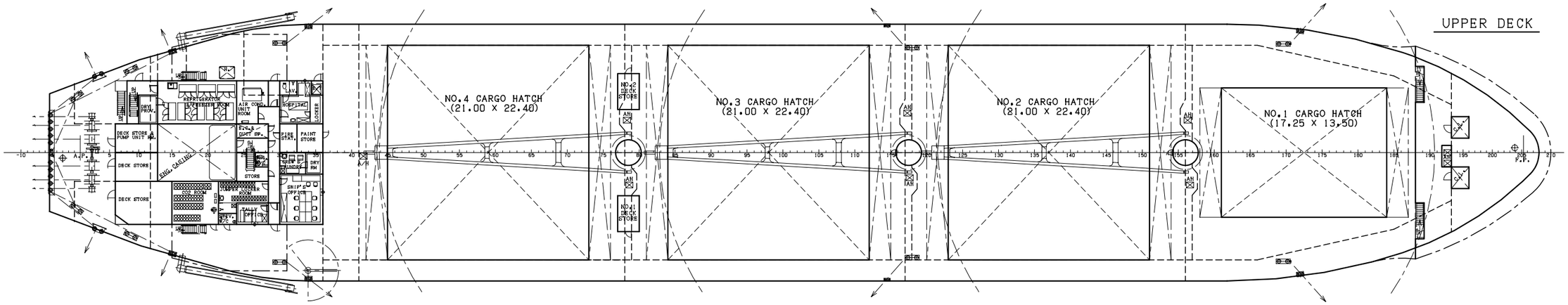
UPPER DECK
NO.4 CARGO HATCH
(21.00 X 22.40)
NO.3 CARGO HATCH
(21.00 X 22.40)
NO.2 CARGO HATCH
(21.00 X 22.40)
NO.1 CARGO HATCH
(17.25 X 13.50)
NO.2 DECK STORE
NO.1 DECK STORE
REFRIGERATOR
ENGINEER ROOM
AIR COND. UNIT ROOM
DECK STORE PUMP UNIT RM.
DECK STORE
ENG. CASING
DECK STORE
FIRE STAT.
PAINT STORE
STORE
SHIP'S OFFICE
A.P.
F.P.

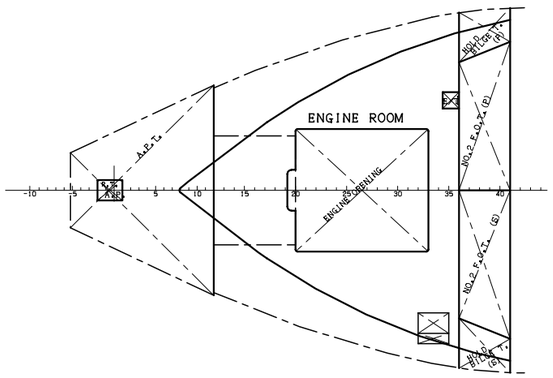
3RD DECK
ENGINE ROOM
ENGINE BERING
A.P.T.
NO.2 F.O.T.(P)
NO.2 F.O.T.(S)
NO.2 D.O.T.(P)
NO.2 D.O.T.(S)

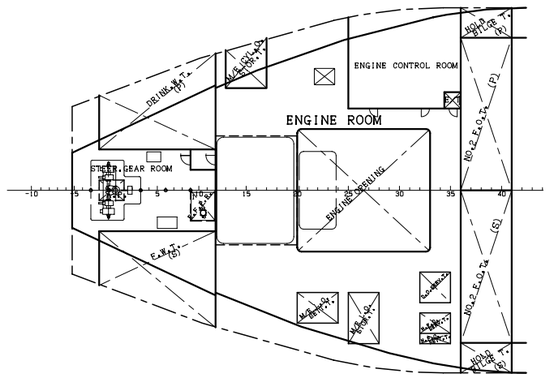
2ND DECK
ENGINE CONTROL ROOM
ENGINE ROOM
STEER. GEAR ROOM
ENGINE BERING
NO.2 F.O.T.(P)
NO.2 F.O.T.(S)
NO.2 D.O.T.(P)
NO.2 D.O.T.(S)

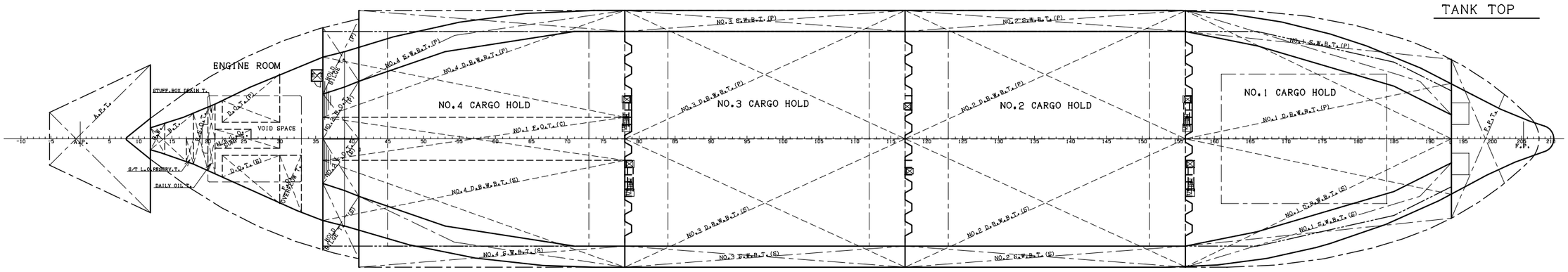
TANK TOP
ENGINE ROOM
STUFF.BOX DRAIN T.
VOID SPACE
S/T L.O.RESERV.T.
DAILY OIL T.
A.P.T.
F.P.T.
NO.4 CARGO HOLD
NO.3 CARGO HOLD
NO.2 CARGO HOLD
NO.1 CARGO HOLD
NO.4 S.W.B.T.(P)
NO.4 D.B.W.B.T.(P)
NO.4 D.B.W.B.T.(S)
NO.4 S.W.B.T.(S)
NO.3 S.W.B.T.(P)
NO.3 D.B.W.B.T.(P)
NO.3 D.B.W.B.T.(S)
NO.3 S.W.B.T.(S)
NO.2 S.W.B.T.(P)
NO.2 D.B.W.B.T.(P)
NO.2 D.B.W.B.T.(S)
NO.2 S.W.B.T.(S)
NO.1 S.W.B.T.(P)
NO.1 D.B.W.B.T.(P)
NO.1 D.B.W.B.T.(S)
NO.1 S.W.B.T.(S)
NO.1 F.O.T.(C)
D.O.T.(P)
D.O.T.(S)
NO.1 D.O.T.(P)
NO.1 D.O.T.(S)
STERN TUBE